SIEMENS

# 4884

STA..3..  STP..3..

ACVATIX™

# Electrothermal actuators

# STA..3.. STP..3..

for radiators, small and Combi valves

---

- **Operating voltage AC/DC 24 V, 2-point positioning signal or PDM (pulse-duration modulation)**
- **Operating voltage AC 230 V, 2-point positioning signal**
- **Operating voltage AC 24 V, Positioning signal DC 0…10 V**
- **Positioning force 100 N, (Variants for FHD with 90 N)**
- **Standard version with connecting cable (2 m / 1 m / 0.8 m)**
- **Actuators without connecting cable used together with:**
  - Connecting cable for up to 15 meters, halogen-free available to 10 meters
  - Connecting cable with LED operating indication
  - Connecting cable with auxiliary switch or DC 0…10 V module
- **Variants supporting synchronous operation of multiple actuators switched in parallel**
- **270° visible position indication**
- **Mounting using a sliding sleeve lock (bayonet)**
- **Adaptor for mounting on third-party valves**
- **Dismantling protection (optional)**
- **Automatic adaption of close – dimension**
- **IP54**
- **Robust, maintenance-free, noise-free**

## Use

- Used in interior rooms
- For Siemens valves:
  - Radiator valves VDN.., VEN.. and VUN..
  - Small valves VD1..CLC, V..P47..
  - Zone valves V..I46..
  - Combi valves VPP46.., VPI46..
  - MiniCombiValves (MCV) VPD.. and VPE..
- For third-party valves
  - Direct assembly: Heimeier, Cazzaniga, Oventrop M30 x 1.5, Honeywell-Braukmann and MNG
  - Mounting using an adapter: See "Type summary" on page 3.
- For additional valves, see "Equipment combinations" on page 6

**Fast selection**

The product range STA..3.. / STP..3.. covers the widest range of equipment combinations and applications. The cable in a standard length is included with actuators using connecting cables. Actuators without connecting cables can be used in combination with the appropriate cables, see Accessories / *Connecting cable*, page 4. See page 5 for additional accessories.

Examples

The following examples simplify fast selection of actuators appropriate to the application (including accessories).

| *Starting point* | *Procedure for quick selection* |
|---|---|
| **Example 1**<br>• Valves used: VVP47..<br>• Connecting cable length: Approx. 0.6 m<br>• Operating voltage: AC 230 V | 1. See "Equipment combinations" on page 6. Correct actuator (group): STP..<br>2. See "Type summary" on page 3, Table "Actuators with connecting cable“: Actuator **STP23** (with 1 m connecting cable) |
| **Example 2**<br>• Valves used: VDN..<br>• Connecting cable length: ca. 5 m<br>• Operating voltage: AC 24 V<br>• Color Black | 1. See "Equipment combinations" on page 6 Actuator (group): STA..<br>2. No proper device can be found in the "Type summary" on page 3, Table "Actuators with connecting cable".<br>3. Select an actuator **without connecting cable** due to the desired color and length of the connecting cable: **STA73B/00**<br>4. Select the appropriate connecting cable from the table "Accessories / *Connecting cable*“, page 4: **ASY23L50B** |

## Type summary

### Actuators with connecting cable

| *Type* | *Item No.* | *Position de-energized* [1] | *Operating voltage* | *Positioning signal* | *Positioning time* | *Connecting cable* | *Weight* |
|---|---|---|---|---|---|---|---|
| STA73 | S55174-A100 | NC | AC/DC 24 V | 2-position, PDM [2] | 270 s | 1 m | 181 g |
| STA23 | S55174-A101 | NC | AC 230 V | 2-position [4] | 210 s | 1 m | 181 g |
| STP73 | S55174-A102 | NO | AC/DC 24 V | 2-position, PDM [2] | 270 s | 1 m | 177 g |
| STP23 | S55174-A103 | NO | AC 230 V | 2-position [4] | 210 s | 1 m | 177 g |
| STA63 | S55174-A104 | NC | AC 24 V | DC 0…10 V | 270 s [5] | 2 m | 205 g |
| STP63 | S55174-A105 | NO | AC 24 V | DC 0…10 V | 270 s [5] | 2 m | 201 g |
| STA73HD [3] | S55174-A106 | NC | AC/DC 24 V | 2-position | 270 s | 0.8 m | 174 g |
| STA23HD [3] | S55174-A107 | NC | AC 230 V | 2-position | 210 s | 0.8 m | 174 g |

[1] NC = Normally Closed = (valve) powerless closed, with regart to radiator valves, VPP46../VPI46.. and VVI46../VXI46.
NO = Normally Open = (valve) powerless open , with regart to radiator valves, VPP46../VPI46.. and VVI46../VXI46.
(valve) powerless closed with regard to the small valves V..P47.. .
[2] Pulse Duration Modulation together with Desigo room controllers and other Siemens controllers according to their data sheet. Not suitable for parallel run
[3] For floor heating distributors, 90 N
[4] Pulse Duration Modulation (PDM) possible with Siemens Thermostats where explicitly stated in the thermostats data sheet. Not suitable for parallel run in connection with PDM
[5] Min. runtime ca. 40 s/mm in control mode (after heating-up time)

### Actuators without connecting cables

(see "Accessories" for proper cables)

| *Type* | *Item No.* | *Position de-energized.* [1] | *Operating voltage* | *Pos.signal / pos.time* [2] | | | *Cable group* | *Weight* |
|---|---|---|---|---|---|---|---|---|
| | | | | *2-position* | *PDM* | *DC 0…10 V* | | |
| Version in white RAL 9016 | | | | | | | | |
| STA73/00 [5] | S55174-A109 | NC | AC/DC 24 V | 270 s | | 270 s [6] | 1, 2, 7, 9 | 133 g |
| STA23/00 | S55174-A110 | NC | AC 230 V | 210 s | – | – | 1, 7 | 133 g |
| STP73/00 [5] | S55174-A111 | NO | AC/DC 24 V | 270 s | | 270 s [6] | 1, 3, 8, 9 | 129 g |
| STP23/00 | S55174-A112 | NO | AC 230 V | 210 s | – | – | 1, 8 | 129 g |
| STA73PR/00 [3] | S55174-A115 | NC | AC/DC 24 V | 270 s | | – | 1, 7, 9 | 133 g |
| STP73PR/00 [3] | S55174-A116 | NO | AC/DC 24 V | 270 s | | – | 1, 8, 9 | 129 g |
| STA73 MP/00 [4] | S55174-A113 | NC | AC/DC 24 V | 270 s | | 270 s [6] | 1, 7, 9 | 133 g |
| STA23 MP/00 [4] | S55174-A114 | NC | AC 230 V | 210 s | – | – | 1, 7 | 133 g |
| Version in black RAL 9005 | | | | | | | | |
| STA73B/00 | S55174-A117 | NC | AC/DC 24 V | 270 s | | 270 s [6] | 4 | 133 g |
| STA23B/00 | S55174-A118 | NC | AC 230 V | 210 | – | – | 4 | 133 g |

[1] NC = Normally Closed = (valve) powerless closed, with regart to radiator valves, VPP46../VPI46.. and VVI46../VXI46.
NO = Normally Open = (valve) powerless open , with regart to radiator valves, VPP46../VPI46.. and VVI46../VXI46.
(valve) powerless closed with regard to the small valves V..P47.. .
[2] At an ambient temperature of 20 °C.
[3] Suitable for parallel operation even in connection with PDM (Pulse Duration Modulation) or on/off control
[4] Packaging unit: 50 pieces (OEM)
[5] In connection with an ASY6AL.. resp. ASY6PL.. DC 0…10 V connection cable/module, the operating voltage is limited to AC 24 V only.
[6] Min. runtime ca. 40 s/mm in control mode (after heating-up time)

## Accessories

*Connecting cable/connecting cable with function module*

| Type | Item No. | Cable group | Length [m] | Weight [g] | Assembled with | Cable coating | Positioning signal | Operating voltage STA23.. STP23.. | Operating voltage STA73.. STP73.. | Color |
|---|---|---|---|---|---|---|---|---|---|---|
| ASY23L08 | S55174-A121 | 1 | 0,8 | 42 | – | PVC | 2-position | AC 230 V | AC/DC 24 V | White |
| ASY23L20 | S55174-A123 | | 2 | 81 | | | | | | |
| ASY23L50 | S55174-A126 | | 5 | 223 | | | | | | |
| ASY23L100 | S55174-A129 | | 10 | 435 | | | | | | |
| ASY23L150 | S55174-A130 | | 15 | 646 | | | | | | |
| ASY23L30B | S55174-A131 | 4 | 3 | 139 | | | | | | Black |
| ASY23L50B | S55174-A132 | | 5 | 223 | | | | | | |
| ASY23L20HF | S55174-A134 | 1 | 2 | 100 | | Halogen-free | | | | White |
| ASY23L50HF | S55174-A135 | | 5 | 218 | | | | | | |
| ASY23L100HF | S55174-A136 | | 10 | 466 | | | | | | |
| ASY6AL20 | S55174-A137 | 2 | 2 | 72 | Function module DC 0…10 V | PVC | DC 0…10 V | – | AC 24 V | |
| ASY6PL20 | S55174-A140 | 3 | 2 | 72 | | | | | | |
| ASY6AL20HF | S55174-A147 | 2 | 2 | 61 | | Halogen-free | | | | |
| ASY6PL20HF | S55174-A150 | 3 | 2 | 61 | | | | | | |
| ASA23U10 | S55174-A153 | 7 | 1 | 75 | Auxiliary switch for STA.. | PVC | 2-position | AC 230 V | AC/DC 24 V | |
| ASP23U10 | S55174-A155 | 8 | 1 | 75 | Auxiliary switch for STP.. | | | | | |
| ASY23L20LD | S55174-A157 | 9 | 2 | 70 | LED | | | - | | |

Adapter

| *Type* | *Item NO.* | *For third-party valves* | *Description* |
|---|---|---|---|
| AV53 | AV53 | Danfoss RA-N | Metal |
| AV63 | S55174-A165 | Giacomini M30x1.5 | Plastic |
| AV59 | AV59 | Vaillant | Metal |
| AV64 | S55174-A166 | Pettinaroli M28x1,5 | Plastic |
| AL100 | AL100 | Siemens 2W..-, 3W..- and 4W..- valves | Metal |
| AV301 | S55174-A159 | Valves with M30 x 1.5 | Higher bayonet adapter, 5 mm[1)] |
| AV302 | S55174-A160 | Valves with M28 x 1,5<br>- Comap<br>- Markaryd<br>- Herz | Higher bayonet adapter, 5 mm[1)] |
| AV303 | S55174-A161 | Valves with M30 x 1<br>- TA | Higher sliding sleeve adapter (bayonet), 5 mm [1)] |
| AV304 | S55174-A167 | Various (5 pieces) | Adapter set for installers |
| AV305 | S55174-A169 | Valves with M30 x 1.5 | Alternate bayonet adapter set (10 pieces)[2)] |
| AV306 | S55174-A171 | Valves with M28x1.5<br>- preset able radiator valves by Markaryd | Higher sliding sleeve adapter (bayonet),<br>5 mm (10 pieces)[2)] |

[1)] The insert is with or without a 5 mm extension depending on assembly.

[2)] Only 10 pack available

Protection against dismantling

| *Type* | *Item no.* | *Description* |
|---|---|---|
| AL431 | S55174-A168 | Tamper-proof fitting to prevent dismantling of the actuator |

## Ordering

When ordering, specify the quantity, product name, and type code.

**Example 1**
1 actuator STA23 with 1 m connecting cable and
1 adapter AV301

**Example 2**
1 actuator STP73/00 without connecting cable,
1 connecting cable ASY23L20LD, 2 m length with LED operating indication, operating voltage AC/DC 24 V, white
1 adapter AV301

Delivery
Actuators, valves and accessories are supplied in separate packages.

## Equipment combinations

| *Siemens valve type* | *Actuator* | *Valve type* | *$k_{vs}$ [$m^3$/h]* | *$\dot{V}$ [l/h]* | *PN class* | *Data sheet valve* |
|---|---|---|---|---|---|---|
| VDN.., VEN.., VUN.. | STA.. | Radiator valves | 0.09…1.41 | – | PN 10 | N2105, N2106 |
| VPD.., VPE.. | STA.. | MCV MiniCombiValves | – | 25…483 | | N2185 |
| VD1..CLC.. | STA.. | Small valves | 0.25…2.6 | – | | N2103 |
| V..I46.. | STA.. | Zone valves | 2…5 | – | PN 16 | N4842 |
| V..P47.. | STP.. | Small valves | 0.25…4 | – | | N4847 |
| VPP46.., VPI46.. (DN10..DN15) | STA.. | Combi valves | – | 30…575 | PN 25 | N4855 |

*Third-party valves, connection M30 x 1.5, without adapter*

**Radiator valves**

- Heimeier
- Watts (Cazzaniga)
- Oventrop M30 x 1.5 (as of 2001)
- Honeywell-Braukmann
- MGN

Valves from additional manufacturers upon request

Additional radiator valves with adapters AV.. see "Accessories/Adapter" page 5

$k_{vs}$ = Nominal flow value for cold water (5…30 °C) through a fully opened valve ($H_{100}$), at a differential pressure of 100 kPa (1 bar)
$\dot{V}$ = Volumetric flow at 0.5 mm stroke

## Technical notes

**NO, NC valves**

| | |
|---|---|
| NO valves | • Valve is opened without actuator (Normally Open)<br>• The valve stem is fully extended<br>• Typical examples: Radiator valves (VDN.., VEN.., VUN..), small valves (VD1..CLC), zone valves (V..I46) and Combi valves (VP..). |
| NC valves | • Valve is closed without actuator (Normally closed)<br>• The valve stem is fully extended<br>• Example: Small valve V..P47.. |

Most third-party valves are NO valves.

**Valve and actuator combination**

| | |
|---|---|
| NO function | • STA.. actuator stem is extended when de-energized.<br>• NC valve required. |
| NC function | • STA.. actuator stem is extended when de-energized.<br>• NO valve required. |

**Note**
NO function
(Normally Open)

The valve is closed in a de-energized state for most valve applications featuring thermal actuators

Actuators with the opposite control action, are used when the reverse function is required: The valve is open in a de-energized state.

The following table displays the appropriate combinations.

**Note**
Response at de-energized actuator

| *Valve* | *Type* | *De-energized actuator* | |
|---|---|---|---|
| | | STA.. | STP.. |
| Radiator valves | VDN.., VEN.., VUN.. | Closed | Open [1) 2)] |
| Small valves | V..P47.. | A ↔ AB open [1) 2)] | A ↔ AB closed |
| | VD1..CLC | Closed | Open [1) 2)] |
| Zone valves | V..I46.. | AB ↔ A closed | AB ↔ A open [1) 2)] |
| Combi valves | VPD.., VPE..<br>VPP46.., VPI46.., | Closed | Open [1) 2)] |

[1)] Controller must support NO valve actuator combinations.
[2)] Combination not recommended as actuator life decreases significantly due to continuous voltage applied to the drive in summer. Makes no sense in terms of energy.

## Technical and mechanical design

**Actuator operation**

The electrothermal actuators STA.. and STP.. are noise-free and maintenance-free. When the control signal is applied to the actuator, the temperature of the heating element rises, which causes the solid expansion medium to expand. It transfers its stroke directly to the installed valve.
The valve starts to open after preheating for approx. 1.5 min if the heating element is switched on in a cold state (room temperature), and achieves the maximum stroke after another approx. 2 min (230 V) or 3 min (24 V). At power-off, the expansion element cools down and the valve will be closed by the spring.
This has the following effect for the actuator types below:

STA73.., STA23.. (NC)
2-position, PDM

The actuator stem retracts and the radiator valve is opened by the own spring. The actuator stem extends when de-energized and the radiator valve is closed.

STP73.., STP23.. (NO)
2-position, PDM

The actuator stem extends and the small valve, V..P47.., is opened. The actuator stem retracts when de-energized and the small valve is closed by the own spring.

STA63..
STA73/00 with
DC 0…10 V module

The actuator stem retracts and the radiator valve is opened by the spring. The position of the stem is proportional to the DC 0…10 V positioning signal. The actuator stem extends when de-energized and the radiator valve is closed. The actuator deploys to the 50% stroke position if the positioning signal is lost when applying operating voltage.
DC 0…10 V actuators support various operation modes, see also under DIP-Switch settings

STP63..
STP73/00 with
DC 0…10 V module

The actuator stem extends and the small valve, V..P47.., is opened. The position of the stem is proportional to the DC 0…10 V positioning signal. The actuator stem retracts when de-energized and the small valve is closed by the own spring. The actuator deploys to the 50% stroke position if the positioning signal is lost when applying operating voltage.
DC 0…10 V actuators support various operation modes, see also under DIP-Switch settings

STP63../STP63..
DIP-switch settings

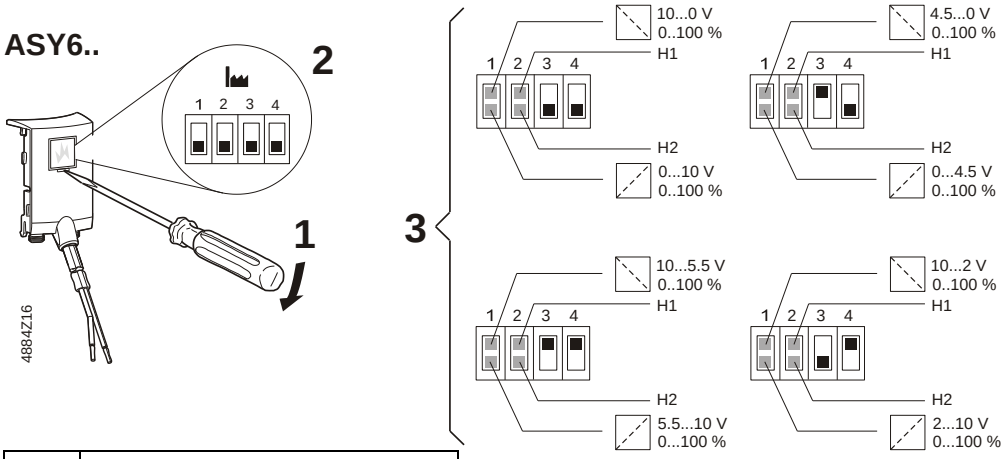


| | |
|---|---|
| H1 | 3 mm stroke |
| H2 | 4.5 mm stroke |

**Position indication on the actuator**

The movement and actual position of the actuator is indicated by the gray interior part.

STA..

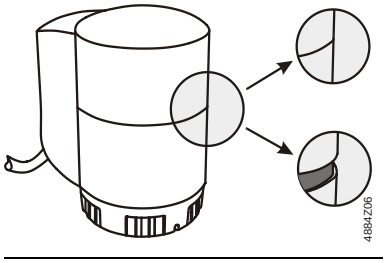


De-energized actuator
- The actuator's stem is extended
- The [1]valve is closed.

Actuator > 3 minutes with power
- The valve stem is retracted.
- The [1]valve is opened.

STP..

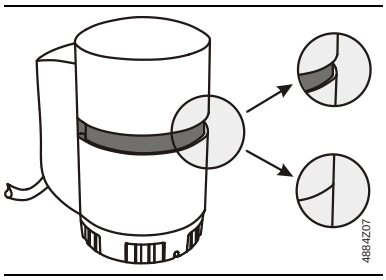


De-energized actuator
- The actuator's stem is retracted.
- The [2]valve is closed.

Actuator > 3 minutes with power
- The actuator's stem is extended
- The [2]valve is opened.

[1] With regard to radiator valves, VPP46../VPI46.. and VVI46../VXI46 .

[2] With regard to V..P47..

**Automatic adaption of close - dimension**

Locking the sliding sleeve, bayonet-ring, triggers the mechanical adaption of the close- dimension. This affects a pre-tensioning for NC types (STA..) on the valve stem resulting in a sealed valve. For NO types (STP..), the actuator stem will be positioned above the valve spindle without pre-tension.

Adaption of close-dimension for STA.. actuators (NC)

Lies in the range between 8.5…13.5 mm [1]

Adaption of close - dimension for STP.. Actuators (NO)

Lies in the range between 12.5…17.5 mm [1]

[1] when used with the supplied standard sliding sleeve

Adaption of close-dimension with higher sliding sleeve (bayonet-nut) AV301, AV302 und AV303, bayonet-nut, AV.. (accessories)

A higher sliding sleeve, bayonet nut, is used in the following cases:

a. If the diameter of the actuator's sliding sleeve, bayonet-ring (42,5 mm) prevents assembly (e.g. angle valves, valves with measurement ports) and

b. To adapt to the desired thread size for third-party manufacturers (M28 x 1.5 or M30 x 1)

It must be used with insert A (black) if a higher sliding sleeve adapter (bayonet) is used to maintain the close-dimension range.

Options

- To achieve the close-dimension range, reduced by 5 mm, the sliding sleeve adapter must be used together with insert B (white).
- To achieve the close-dimension range, increased by 5 mm, the sliding sleeve adapter must be used without insert A or B.

Expansion to the close-dimension is required to adapt to third-party valves that do not operate within the standard close dimension range.

Close-dimension range with the different adapters:

| | Standard bayonet-nut | Higher bayonet adapter<br>AV301 → M30 x 1,5<br>AV302 → M28 x 1,5<br>AV303 → M30 x 1 | | |
|---|---|---|---|---|
| | No insert | Insert-A (black) | Insert-B (white) | No insert |
| STA.. | 8.5 … 13.5 | 8.5 … 13.5 | 3.5 … 8.5 | 13.5 … 18.5 |
| STP.. | 12.5 … 17.5 | 12.5 … 17.5 | 7.5 … 12.5 | 17.5 … 22.5 |

**Positioning times, Opening/closing**

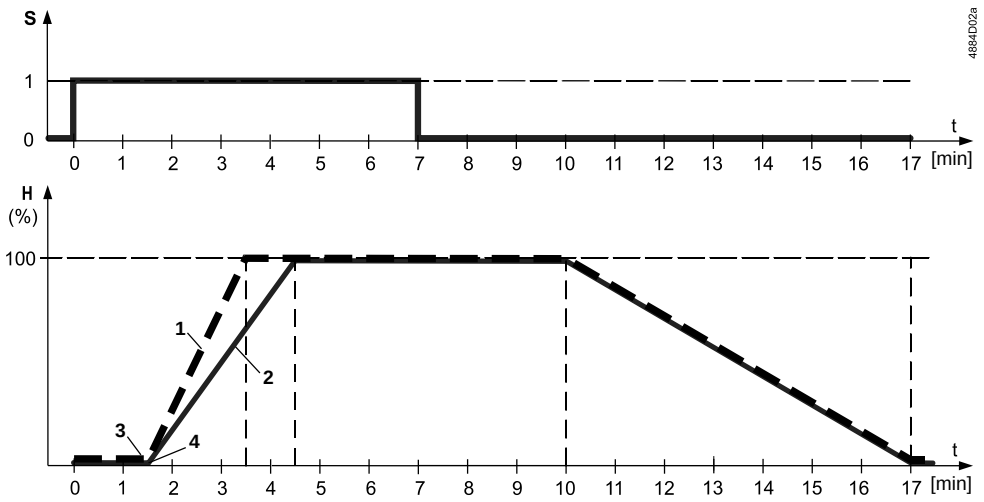


S Positioning signal
H Stroke in %
1 Actuator ST..2.. (AC 230 V)
2 Actuator ST..7.. (AC 24 V)
3/4 Warm start
– Values at 25° C (ambient temperature)
– The positioning time depends on the voltage and the ambient temperature

**⚠ Warning**

Some controllers drive the valve actuators with pulsed signals. This increases the response time. For optimal control, the ambient temperature of the actuator must be < 40°C.

Pulse-duration modulation

## Accessories

**Separate connecting cable**

The actuators STA../00 and STP../00 are supplied without a connecting cable. They can be assembled as per the table "Accessories/connecting cables" on page 4. The product also includes halogen-free cable (Lengths 2 / 5 / 10 m).

ASY23L..

Standard connecting cable for all STA.. and STP.. Actuators for open/close positioning signal AC 24 V or AC 230 V with PVC coating. Lengths 0.8 / 2 / 3 / 5 / 10 / 15 m.

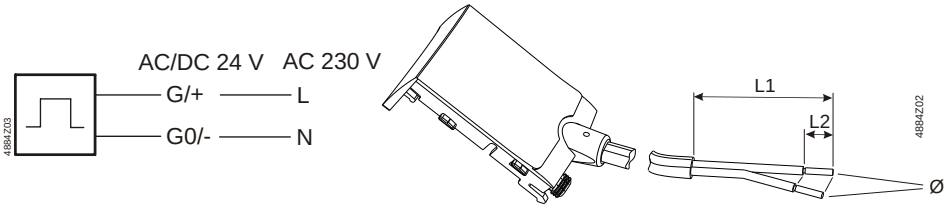


G/+ L brown
G0/- N blue

L1 ca. 50 mm
L2 ca. 6 mm
Cross section ≤ 2 m 0,5 mm$^2$ , > 2 m 0,75 mm$^2$

ASY6AL..

The connecting cables are available in various lengths and coating quality with DC 0…10 V control module and AC 24 V voltage supply, can be combined with STA73/00 thermal actuators. To this end, the metal bridge supplied with the cable must be inserted in the actuator.

ASY6PL..

The connecting cables are available in various lengths and coating quality with DC 0…10 V control module and AC 24 V voltage supply, can be combined with STP73/00 thermal actuators. To this end, the metal bridge supplied with the cable must be inserted in the actuator.

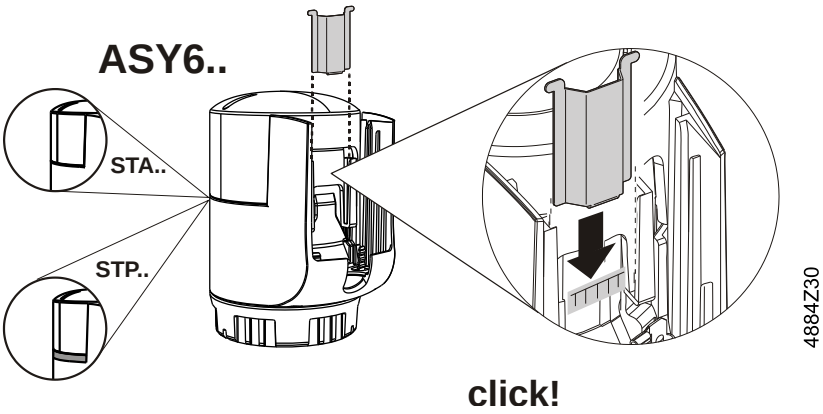


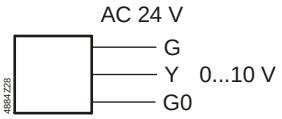


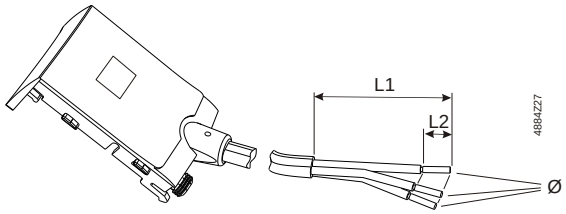


| | | | |
|---|---|---|---|
| G | braun | L1 | ca. 50 mm |
| Y | rot | L2 | ca. 6 mm |
| G0 | blau | | Cross section ≤ 2 m 0,5 $mm^2$ |

**ASA23U10** with aux. switch for **STA../00**
**ASP23U10** with aux. switch for **STP../00**

Connecting cable with PVC coating and integrated auxiliary switch for all STA../00, STP../00 actuators for open/close positioning signal AC 24 V or AC 230 V. Length 1 m. To this end, the plastic bridge supplied with the cable must be inserted in the actuator.

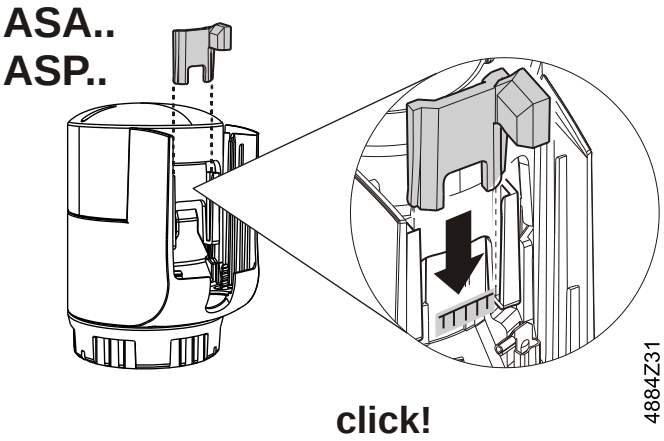

Switch power:

| *AC* | *DC* |
|---|---|
| 3 A resistive | 4…30 V / 100 mA |
| 2 A inductive | 48 V / 1 A |

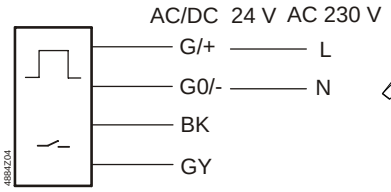


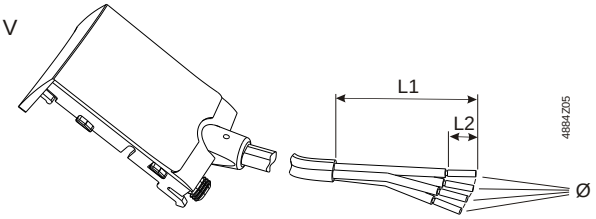


G/+ brown
G0/- blue
BK black
GY gray

L1 ca. 50 mm
L2 ca. 6 mm
Cross section 0.5 $mm^2$

Switch-point: Between 1.5 and 2.3 mm stroke

**ASY23L20LD**
with LED indicator

The same as AS..23U but for AC/DC 24 V only. The green LED is lit synchronously with the open/close control. It visually indicates control and provides support during commissioning and service. Length 2 m.

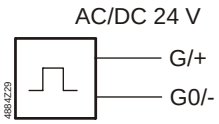


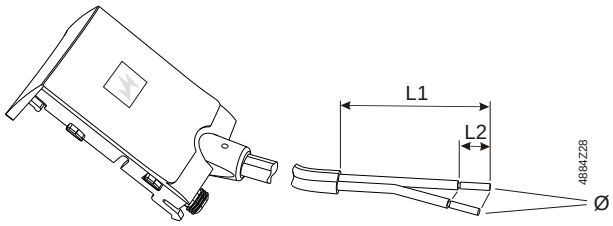


G/+ brown
G0/- blue

1 LED
L1 ca. 50 mm
L2 ca. 6 mm
Cross section 0.5 $mm^2$

**Adapter AV.. for third-party valves**

Adapters are available for mounting the STA.. and STP.. actuators on valves from other manufacturers (see "Accessories/Adapters" on page 5).

**Tamper-proof fitting AL431**

Tamper-proof fittings can be used to prevent unauthorized intervention on the actuators.

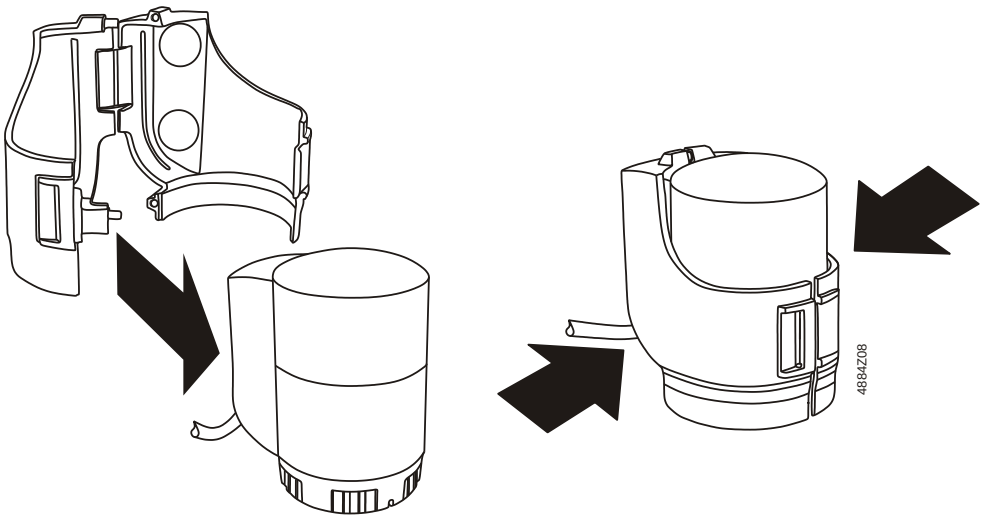

**Mounting on valve**

Mounting instructions are included in the packaging.

Actuators STA.. or STP.. are supplied as separate units. They can be assembled with just a few movements prior to commissioning:

- Remove the protective cover from the valve body
- Insert the sliding sleeve, bayonet-nut, on the valve and manually tighten
- Put actuator in position and manually tighten (clockwise) the bayonet-ring until a second click
- STA../00, STP../00: Plug in the connecting cable
- Connect to operating voltage only after mounting

**Hints for the dismounting:**

- Interrupt the power supply and disconnect the connection cable
- Wait for 6 min. until the actuator is cooled down
- Turn the sliding sleeve, bayonet-ring, counter clockwise to the end-position

At dismounting the actuator will be set automatically to the original position (factory setting).

Seldom may happen that the actuator will be released from the valve together with the valve whereby the bayonet-nut stuck in the actuator. In order to re-use the actuator, the actuator's stem has to be re-set to the original position (factory setting). For this purpose, turn the actuator up-side-down and push back the stem with simultaneous counter clock wise turning of the sliding sleeve, bayonet-ring, until latching.

⚠ **Warning**

**Do not use pipe wrenches, spanners or similar!**

**Mounting positions**

Actuators may be installed in all positions (IP54 standard guaranteed).

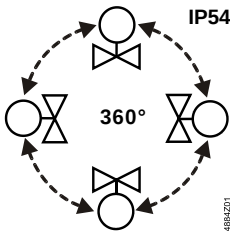


**Notes on electrical installation**

- Comply with all local regulations when installing.
- Connect the connecting cable downward and away from the bottom.
- Provide for a means to isolate from mains power/connecting voltage, e.g. by connecting an automatic circuit breaker or switch fuse upstream of the control unit.

## Maintenance

The actuator is maintenance-free.

Repair

Disconnect the connecting cable from the operating voltage prior to replacing. Opening the actuator can cause irreparable damage. It may also result in injury from the installed, strong spring.
The actuator cannot be repaired; the entire unit must be replaced.

## Disposal

| | |
|---|---|
| | The device is considered an electronics device for disposal in terms of European Directive 2012/19/EU and may not be disposed of as domestic garbage.<br>• Dispose of the device through channels provided for this purpose.<br>• Comply with all local and currently applicable laws and regulations. |

## Warranty

The technical data relating to specific applications are valid only in conjunction with the valves listed under "Equipment combinations" in this data sheet on page "6".

**When using STA.. and STP.. actuators, users are responsible for ensuring the proper functioning of actuators when used together with third-party valves; any guarantees on the part of Siemens Building Technologies expire accordingly.**

## Technical data

| | | STA73.. / STA73../00<br>STA73HD<br>STP73.. / STP73../00 | STA23.., STA23../00<br>STA23HD<br>STP23.., STP23../00 | STA63..<br>STP63.. |
|---|---|---|---|---|
| **Power supply** | Operating voltage<br>Frequency | AC/DC 24 V ± 20 % [1]<br>50 / 60 Hz | AC 230 V ± 15 %<br>50 / 60 Hz | AC 24 V ± 20 %<br>50 / 60 Hz |
| | Power consumption at 50 Hz<br>Operation<br>At power-up | <br>2.5 W<br>6 VA | <br>2.5 W<br>58 VA | <br>2.5 W<br>6 VA |
| | Switch-on current (transient) | 250 mA | 250 mA | 250 mA |
| | Primary fuse | External | | |
| **Signal input** | Positioning signal | 2-position, PDM [2]<br>DC 0…10 V [3] | 2-position | DC 0…10 V |
| | Parallel operation of multiple actuators | For PDM<br>ST..3PR/00 | May be limited by the controller's output power | |
| **Operating data** | Positioning time at 20 °C, 50 Hz | 270 s | 210 s | 270 s [6] |
| | Positioning force | 100 N, STA..HD 90 N | | |
| | Nominal stroke | Max. 4.5 mm | | 4.5 mm (adjustable 3 mm[4]) |
| | Permissible temperature of medium in the connected valve | 1…110 °C | | |
| | Actuator stem for "de-energized actuator“ | STA.. extended<br>STP.. retracted | | |
| | Radiator valves (e.g. VD..) | See "Equipment combinations" on page 6. | | |
| | Small valves (V..P47..) | | | |
| | Zone valves (V..I46..) | | | |
| | Maintenance | No maintenance required | | |
| **Electrical connection** | Cable length | See page 3, "Type summary“ or page 4, "Connecting cables“ and page 5, "Adapter“ | | 2 m |
| | Cross section [5] | Strands 2 x 0.5 $mm^2$ | Strands 2 x 0,75 $mm^2$ | Strands 3 x 0.5 $mm^2$ |
| **Mounting** | Attached to the valve | Bayonet-nut/-ring M30 x 1.5; – see also under adapters | | |
| | Mounting position | Any, 360° | | |
| **Colors** | Cover | White, RAL 9016; STA..B/00 black, RAL 9005 | | |
| | Lower part | STA.. light gray, RAL 7035, STP.. Traffic gray, RAL 7042<br>STA..B/00 black, RAL 9005 | | |
| | Connecting cables | See "Connecting cables“ on page 4 and page 5, "Adapter“ | | |
| **Norms and directives for actuators and connecting cables** | Electromagnetic compatibility (Application) | For residential, commercial and industrial environments | | |
| | Product standard | EN60730-x and EN60335-x | | |
| | EU Conformity (CE)<br>STA.. | <br>8000072738 [7] | | |
| | STP.. | A5W00004469 [7] | | |
| | Protection class as per | EN 60730 Class III | EN 60730 Class II | EN 60730 Class III |
| | Degree of pollution | As per EN 60730 class II | | |
| | Housing type | IP54 as per EN 60529 | | |
| | Environmental compatibility | The product environmental declaration CE1E4884en [7] contains data on environmentally compatible product design and assessments (RoHS compliance, materials composition, packaging, environmental benefit, disposal). | | |
| **Dimensions** | Dimensions | See "Dimensions“ on page 17 | | |
| **Weight** | Actuator weight | See table "Type summary" actuators with and without connecting cable on page 3. | | |
| | Weight of connecting cable ASY.. | See table Accessories page 4 | | - |
| **Materials**<br>**STA.., STP..** | Cover and lower part | Polycarbonate | | |
| **Conn. cables** | ASY.., ASP.. | PVC | | |
| | ASY..HF | Halogen-free as per VDE 0207-24 | | |

1) Permitted for safety extra-low voltage only (SELV, PELV)
2) PDM = Pulse-duration modulation
3) STA73/00, STA73 MP/00 and STA73B/00, with connecting cable ASY6AL..
STP73/00 with connecting cable ASY6PL..
4) Can be set using the DIP switch under the cover on the connecting cable. See Mounting instructions M4884
5) Separate cable, see page 4
6) Min. runtime ca. 30 s/mm in control mode (heat-up time)
7) The documents can be downloaded from http://siemens.com/bt/download

**General ambient conditions**

| | Operation EN 60721-3-3 | Transportation EN 60721-3-2 | Storage EN 60721-3-1 |
|---|---|---|---|
| Temperature | 5…50 °C | –20…60 °C | 5…50 °C |
| Temperature for quasi-continuous control | 5…40 °C | – | – |
| Humidity | < 85 % r.h. | < 95 % r.h. | 5…100 % r.h. |

## Connecting cables

**Connecting cables w/o** 0…10 V module

| | ASY23.. | ASY23..B | ASY23..HF | ASY23L20LD | ASA23U10 | ASP23U10 |
|---|---|---|---|---|---|---|
| Length [m] | 0.8 / 2 / 3 / 5 / 10 / 15 | 3 / 5 | 2 / 5 / 10 | 2 | 1 | 1 |
| Cross section [mm²] | ≤ 2 m: 0.50<br>> 2 m: 0.75 | 0.75 | 0.75 | 0.50 | 0.50 | 0.50 |
| Operating voltage [V] | 24 / 230 [1)] | 24 / 230 [1)] | 24 / 230 [1)] | 24 | 24 / 230 [1)] | 24 / 230 [1)] |
| Housing color | White, RAL 9016 | Black, RAL 9005 | White, RAL 9016 | White, RAL 9016 | White, RAL 9016 | White, RAL 9016 |
| Coating | PVC | PVC | Halogen-free | PVC | PVC | PVC |
| Auxiliary switch | – | – | – | – | x | x |
| Switch-point auxiliary switch | – | – | – | – | 1.5 ... 2.3 mm stroke | 1.5 ... 2.3 mm stroke |
| Indicator | – | – | – | LED | – | – |
| Weight | See Table on page 4 | | | | | |

[1)] AC 230 V with STA23../STP23.., AC/DC 24 V with STA73../STP73..

**Connecting cables with** 0…10 V module

| | ASY6AL.. | | ASY6PL.. | |
|---|---|---|---|---|
| | ASY6AL20 | ASY6AL20HF | ASY6PL20 | ASY6PL20HF |
| Length [m] | 2 | 2 | 2 | 2 |
| Cross section [mm²] | 0.22 | 0.22 | 0.22 | 0.22 |
| Operating voltage [V AC] | 24 | 24 | 24 | 24 |
| Color | White, RAL 9016 | White, RAL 9016 | White, RAL 9016 | White, RAL 9016 |
| Coating | PVC | Halogen-free | PVC | Halogen-free |
| Signal | 0…10 V | 0…10 V | 0…10 V | 0…10 V |
| Interior resistance Ri | 100 kΩ | 100 kΩ | 100 kΩ | 100 kΩ |
| Weight | See Table on page 4 | | | |

Dimensions in mm

**STA..**

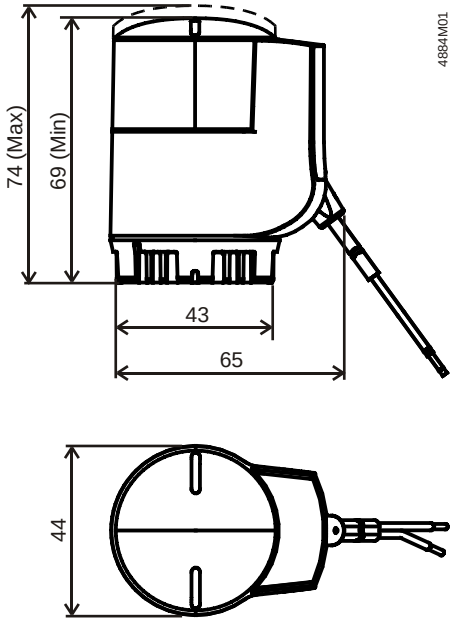


**STP..**

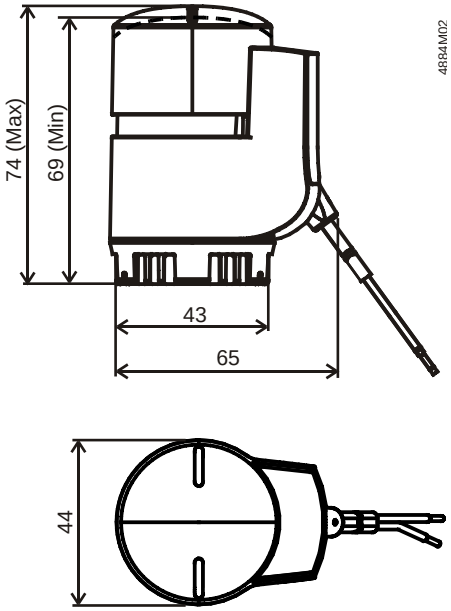

Issued by
Siemens Switzerland Ltd
Building Technologies Division
International Headquarters
Gubelstrasse 22
6301 Zug
Switzerland
Tel. +41 41-724 24 24
www.siemens.com/buildingtechnologies

© Siemens Switzerland Ltd, 2012
Technical specifications and availability subject to change without notice.